HOROZ ELECTRIC

Experience in Lighting

LED GARDEN LAMP

Product&Family Code: 076 042 0005

TWIST-5

IP65

BLACK

Technical Drawing

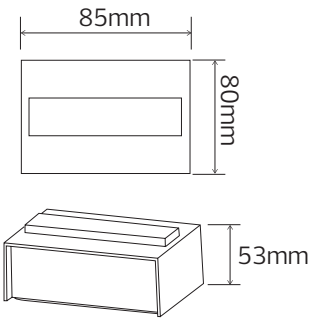

Technical Data

Voltage (V)	85-265V
Product Wattage (W)	5
Equivalence with incandescent lamp(W)	40
Colour Render Index (Ra)	>Ra70
Colour Temperature (K)	4200K
Materials	ALUMINIUM
Protection Class	I
Dimmable	No
Warm-up time up to 60 %of the full light output	Instant Full Light
Luminous Flux (lm)	350
Luminous Efficacy (lm/W)	70
Rated Life (hrs)	25.000
IP Rating	65
Power Factor	>0.5
Beam Angle	120°
Starting Time	<0.2s
Number of ON-OFF cycling	x15.000

Applications

- Designed Outdoor Applications: Hotel, home lighting, recreation place, supermarket, office building.

Features

- Lighting Direction: Up, Down and Front.
- High heat dissipation, low carbon and environmental protection.
- SMD LED Lamp Base.
- Innovative Design of Assembly Structure

SMD LED POWER LED 5W 2 YEARS GUARANTEE RoHS

Istanbul Trakya Free Zone
Ferhatpasa S.B. Mah. Acelya Sk.
Dıs Kapı: 2 Ic Kapı: 301
Horozk Electric & Electronic Trade

P.+90 (212) 786 62 20 (4 Line) F.+90 (212) 786 62 19
info@horozelektrik.com